# Chapter 6: Data Link Layer

Introduction to Networks v7.0
(ITN)

# Module Objectives

**Module Title:** Data Link Layer

**Module Objective**: Explain how media access control in the data link layer supports communication across networks.

| Topic Title | Topic Objective |
|---|---|
| **Purpose of the Data Link Layer** | Describe the purpose and function of the data link layer in preparing communication for transmission on specific media. |
| **Topologies** | Compare the characteristics of media access control methods on WAN and LAN topologies. |
| **Data Link Frame** | Describe the characteristics and functions of the data link frame. |

© 2016 Cisco and/or its affiliates. All rights reserved. Cisco Confidential

# 6.1 Purpose of the Data Link Layer

© 2016 Cisco and/or its affiliates. All rights reserved. Cisco Confidential

# The Data Link Layer

- The Data Link layer is responsible for communications between end-device network interface cards.
- It allows upper layer protocols to access the physical layer media and encapsulates Layer 3 packets (IPv4 and IPv6) into Layer 2 Frames.
- It also performs error detection and rejects corrupts frames.

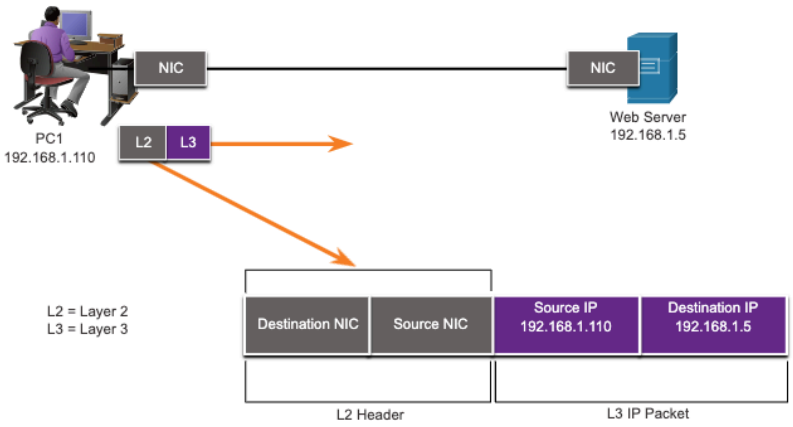


© 2016 Cisco and/or its affiliates. All rights reserved. Cisco Confidential

# IEEE 802 LAN/MAN Data Link Sublayers

IEEE 802 LAN/MAN standards are specific to the type of network (Ethernet, WLAN, WPAN, etc).

The Data Link Layer consists of two sublayers. **Logical Link Control (LLC)** and **Media Access Control (MAC).**

- The LLC sublayer communicates between the networking software at the upper layers and the device hardware at the lower layers.
- The MAC sublayer is responsible for data encapsulation and media access control.

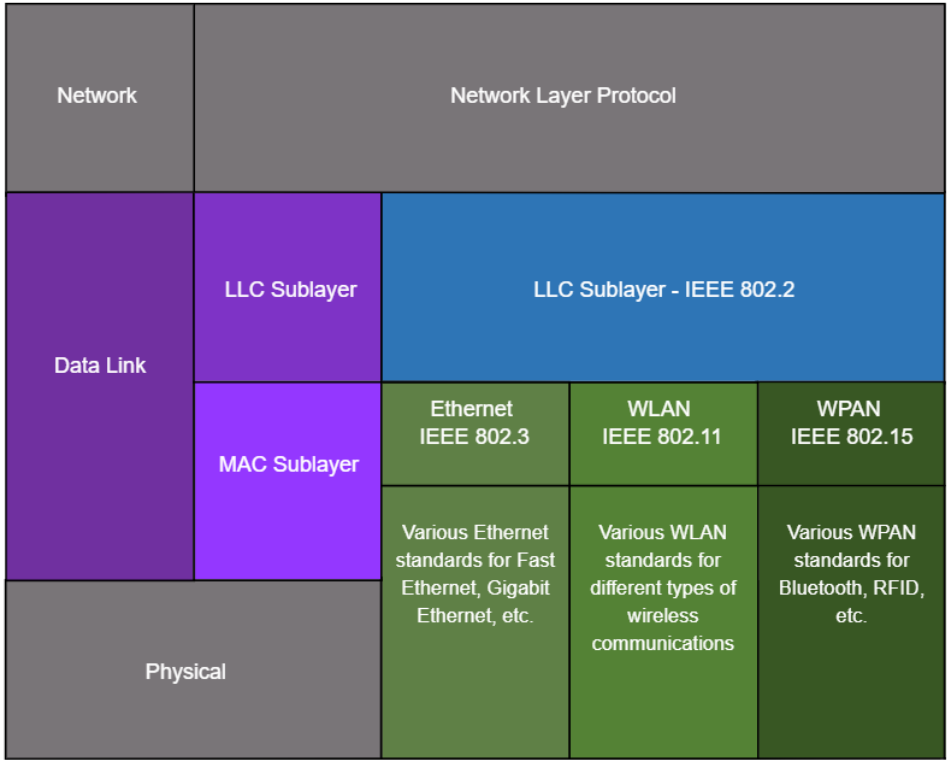


© 2016 Cisco and/or its affiliates. All rights reserved. Cisco Confidential

# Providing Access to Media

Packets exchanged between nodes may experience numerous data link layers and media transitions.

At each hop along the path, a router performs four basic Layer 2 functions:

- Accepts a frame from the network medium.
- De-encapsulates the frame to expose the encapsulated packet.
- Re-encapsulates the packet into a new frame.
- Forwards the new frame on the medium of the next network segment.

© 2016 Cisco and/or its affiliates. All rights reserved. Cisco Confidential

# Data Link Layer Standards

Data link layer protocols are defined by engineering organizations:

- Institute for Electrical and Electronic Engineers (IEEE).
- International Telecommunications Union (ITU).
- International Organizations for Standardization (ISO).
- American National Standards Institute (ANSI).

© 2016 Cisco and/or its affiliates. All rights reserved. Cisco Confidential

# 6.2 Topologies

© 2016 Cisco and/or its affiliates. All rights reserved. Cisco Confidential

# Physical and Logical Topologies

The topology of a network is the arrangement and relationship of the network devices and the interconnections between them.

There are two types of topologies used when describing networks:

- **Physical topology** – shows physical connections and how devices are interconnected.
- **Logical topology** – identifies the virtual connections between devices using device interfaces and IP addressing schemes.

© 2016 Cisco and/or its affiliates. All rights reserved. Cisco Confidential

# WAN Topologies

There are three common physical WAN topologies:

- **Point-to-point** – the simplest and most common WAN topology. Consists of a permanent link between two endpoints.
- **Hub and spoke** – similar to a star topology where a central site interconnects branch sites through point-to-point links.
- **Mesh** – provides high availability but requires every end system to be connected to every other end system.

© 2016 Cisco and/or its affiliates. All rights reserved. Cisco Confidential

# Point-to-Point WAN Topology

- Physical point-to-point topologies directly connect two nodes.
- The nodes may not share the media with other hosts.
- Because all frames on the media can only travel to or from the two nodes, Point-to-Point WAN protocols can be very simple.

© 2016 Cisco and/or its affiliates. All rights reserved. Cisco Confidential

# LAN Topologies

End devices on LANs are typically interconnected using a star or extended star topology. Star and extended star topologies are easy to install, very scalable and easy to troubleshoot.

Early Ethernet and Legacy Token Ring technologies provide two additional topologies:

- **Bus** – All end systems chained together and terminated on each end.
- **Ring** – Each end system is connected to its respective neighbors to form a ring.

Physical Topologies

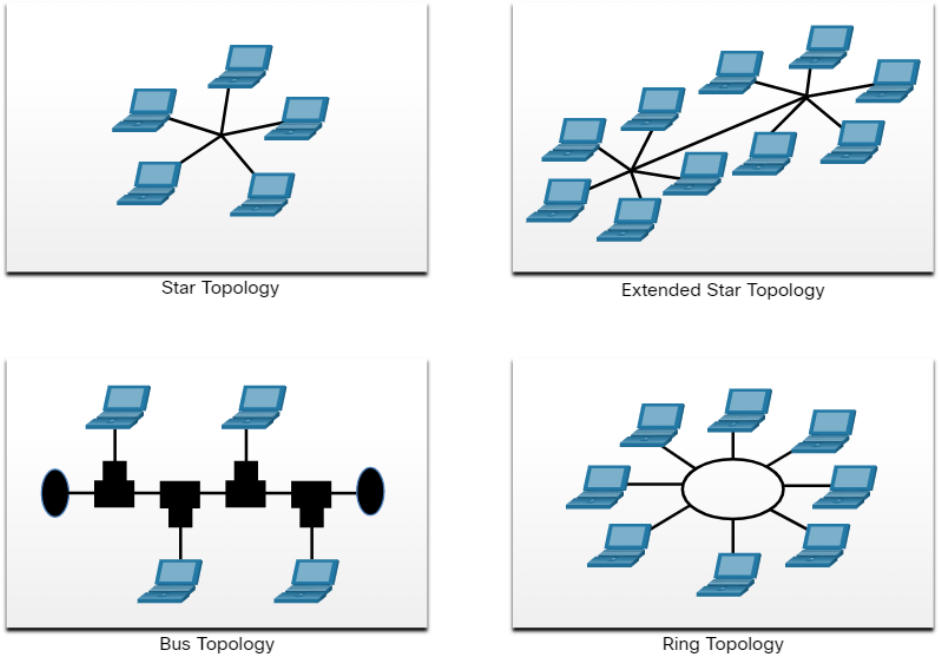


© 2016 Cisco and/or its affiliates. All rights reserved. Cisco Confidential

# Half and Full Duplex Communication

**Half-duplex communication**

- Only allows one device to send or receive at a time on a shared medium.
- Used on WLANs and legacy bus topologies with Ethernet hubs.

**Full-duplex communication**

- Allows both devices to simultaneously transmit and receive on a shared medium.
- Ethernet switches operate in full-duplex mode.

© 2016 Cisco and/or its affiliates. All rights reserved. Cisco Confidential

# Access Control Methods

**Contention-based access**

All nodes operating in half-duplex, competing for use of the medium. Examples are:

- Carrier sense multiple access with collision detection (CSMA/CD) as used on legacy bus-topology Ethernet.
- Carrier sense multiple access with collision avoidance (CSMA/CA) as used on Wireless LANs.

**Controlled access**

- Deterministic access where each node has its own time on the medium.
- Used on legacy networks such as Token Ring and ARCNET.

© 2016 Cisco and/or its affiliates. All rights reserved. Cisco Confidential

# Contention-Based Access – CSMA/CD

**CSMA/CD**

- Used by legacy Ethernet LANs.
- Operates in half-duplex mode where only one device sends or receives at a time.
- Uses a collision detection process to govern when a device can send and what happens if multiple devices send at the same time.

**CSMA/CD collision detection process**:

- Devices transmitting simultaneously will result in a signal collision on the shared media.
- Devices detect the collision.
- Devices wait a random period of time and retransmit data.

© 2016 Cisco and/or its affiliates. All rights reserved. Cisco Confidential

# Contention-Based Access – CSMA/CA

**CSMA/CA**

- Used by IEEE 802.11 WLANs.
- Operates in half-duplex mode where only one device sends or receives at a time.
- Uses a collision avoidance process to govern when a device can send and what happens if multiple devices send at the same time.

**CSMA/CA collision avoidance process**:

- When transmitting, devices also include the time duration needed for the transmission.
- Other devices on the shared medium receive the time duration information and know how long the medium will be unavailable.

© 2016 Cisco and/or its affiliates. All rights reserved. Cisco Confidential

# 6.3 Data Link Frame

© 2016 Cisco and/or its affiliates. All rights reserved. Cisco Confidential

# The Frame

Data is encapsulated by the data link layer with a header and a trailer to form a frame.

A data link frame has three parts:

- Header
- Data
- Trailer

The fields of the header and trailer vary according to data link layer protocol.

The amount of control information carried with in the frame varies according to access control information and logical topology.

© 2016 Cisco and/or its affiliates. All rights reserved. Cisco Confidential

# Frame Fields

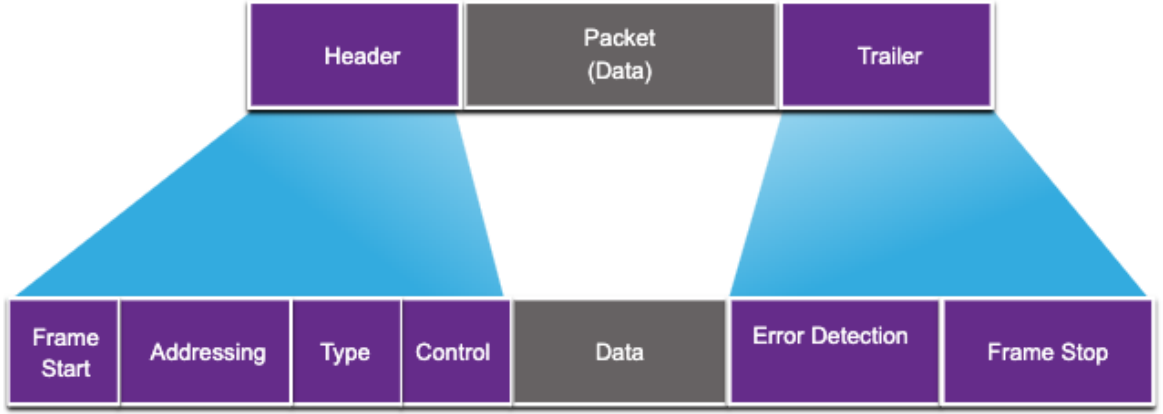


| Field | Description |
|---|---|
| Frame Start and Stop | Identifies beginning and end of frame |
| Addressing | Indicates source and destination nodes |
| Type | Identifies encapsulated Layer 3 protocol |
| Control | Identifies flow control services |
| Data | Contains the frame payload |
| Error Detection | Used for determine transmission errors |

© 2016 Cisco and/or its affiliates. All rights reserved. Cisco Confidential

# Layer 2 Addresses

- Also referred to as a physical address.
- Contained in the frame header.
- Used only for local delivery of a frame on the link.
- Updated by each device that forwards the frame.

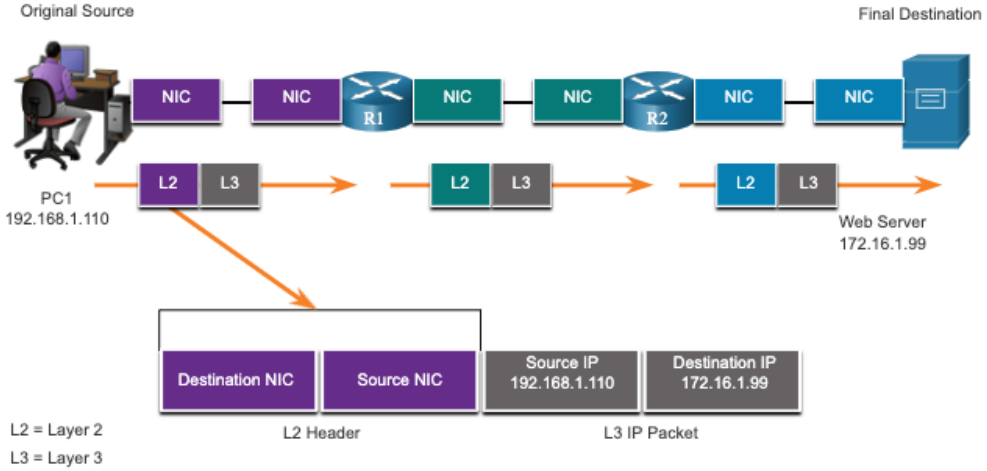


© 2016 Cisco and/or its affiliates. All rights reserved. Cisco Confidential

# LAN and WAN Frames

The logical topology and physical media determine the data link protocol used:

- Ethernet
- 802.11 Wireless
- Point-to-Point (PPP)
- High-Level Data Link Control (HDLC)
- Frame-Relay

Each protocol performs media access control for specified logical topologies.

© 2016 Cisco and/or its affiliates. All rights reserved. Cisco Confidential

# 6.4 Module Practice and Quiz

© 2016 Cisco and/or its affiliates. All rights reserved. Cisco Confidential

# What did I learn in this module?

- The data link layer of the OSI model (Layer 2) prepares network data for the physical network.
- The data link layer is responsible for network interface card (NIC) to network interface card communications.
- The IEEE 802 LAN/MAN data link layer consists of the following two sublayers: LLC and MAC.
- The two types of topologies used in LAN and WAN networks are physical and logical.
- Three common types of physical WAN topologies are: point-to-point, hub and spoke, and mesh.
- Half-duplex communications exchange data in one direction at a time. Full-duplex sends and receives data simultaneously.
- In contention-based multi-access networks, all nodes are operating in half-duplex.
- Examples of contention-based access methods include: CSMA/CD for bus-topology Ethernet LANs and CSMA/CA for WLANs.
- The data link frame has three basic parts: header, data, and trailer.
- Frame fields include: frame start and stop indicator flags, addressing, type, control, data, and error detection.
- Data link addresses are also known as physical addresses.
- Data link addresses are only used for link local delivery of frames.

© 2016 Cisco and/or its affiliates. All rights reserved. Cisco Confidential

CISCO